TRINITY GLASS INTERNATIONAL
33615 1st Way S, Federal Way, WA 98003

L F Schmidt

Digitally signed by Lyndon F Schmidt
Date: 2025.07.02 11:26:48 -04'00'

L. F. SCHMIDT LICENSE No. 43409 STATE OF FLORIDA PROFESSIONAL ENGINEER

This item has been digitally signed and sealed by **L. F. Schmidt, P.E.** on the date adjacent to the seal.

Printed copies of this document are not considered signed and sealed and the signature must be verified on any electronic copies.

THIS PRODUCT APPROVAL IS VALID ONLY FOR THE STATE OF FLORIDA

"Direct Glaze"

Single Fiberglass Door

INSWING/OUTSWING "IMPACT"

GENERAL NOTES

1. This product evaluation drawing has been developed in compliance with the 8th Edition (2023) Florida Building Code (FBC) including the "High Velocity Hurricane Zone" (HVHZ).
2. Product anchors shall be as listed and spaced as shown on details. Anchor embedment to base material shall be beyond wall dressing or stucco.
3. When used in the "HVHZ", this product complies with Section 1626 of the FBC and does not require an impact resistant covering.
4. For 2x stud framing construction, anchoring of these units shall be the same as that shown for 2x buck masonry construction.
5. Site conditions that deviate from the details of this drawing require further engineering analysis by a licensed engineer or registered architect.
6. This product meets the water infiltration requirements for the "HVHZ".

TABLE OF CONTENTS

SHEET#	DESCRIPTION
1	Typical elevations, design pressures & general notes
2	Door panel details
3	Flush Glazing details
4	Horizontal & vertical cross sections (2X buck)
5	Horizontal & vertical cross sections (1X buck)
6	Horizontal & vertical cross sections (Direct to Masonry)
7	Vertical cross sections
8	Frame anchoring & hardware details
9	Bill of materials

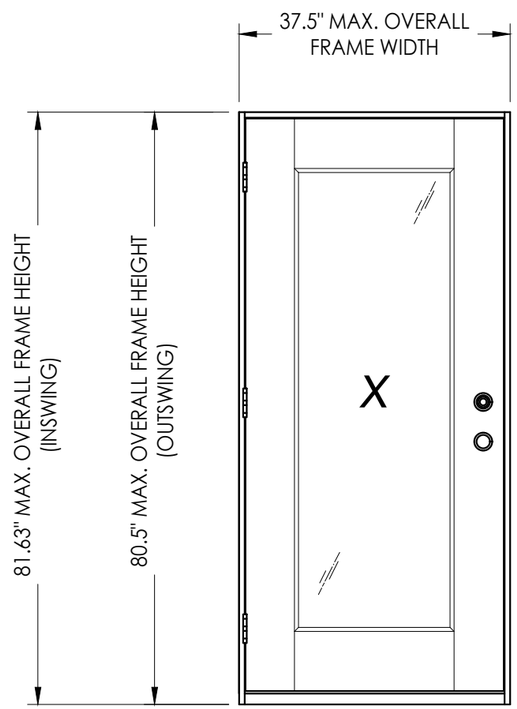

CONFIGURATION	MAX. FRAME DIMENSION	DESIGN PRESSURE (PSF) INSWING		DESIGN PRESSURE (PSF) OUTSWING	
		POSITIVE	NEGATIVE	POSITIVE	NEGATIVE
X	37.5" x 81.63"	+50.0	-50.0	+50.0	-50.0

Documents Prepared By:
Lyndon F. Schmidt
P.E. No. 43409
RW BUILDING CONSULTANTS, INC.
P.O. Box 230, Valrico, FL 33595
Phone No.: 813.659.9197
FBPE Registry No. 9813

PRODUCT: TRINITY FIBERGLASS DOOR

PART OR ASSEMBLY: TYPICAL ELEVATION, DESIGN PRESSURES & GENERAL NOTES

NO.	DATE	REVISIONS	BY

DATE: 5/15/25
SCALE: N.T.S.
DWG. BY: RW
CHK. BY: LFS
DRAWING NO.: FL-47284.9
SHEET 1 OF 9

© 2025 R.W. Building Consultants Inc.

Z:\2023 FBC Drawings\Trinity Glass Int'l\FL-47284 R1\FL-47284.9.dwg

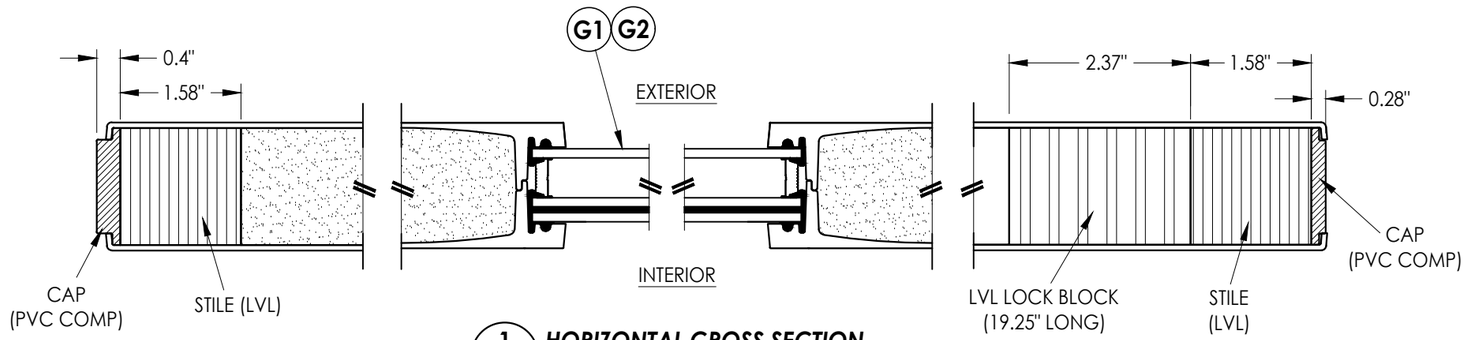

1/2 **HORIZONTAL CROSS SECTION**

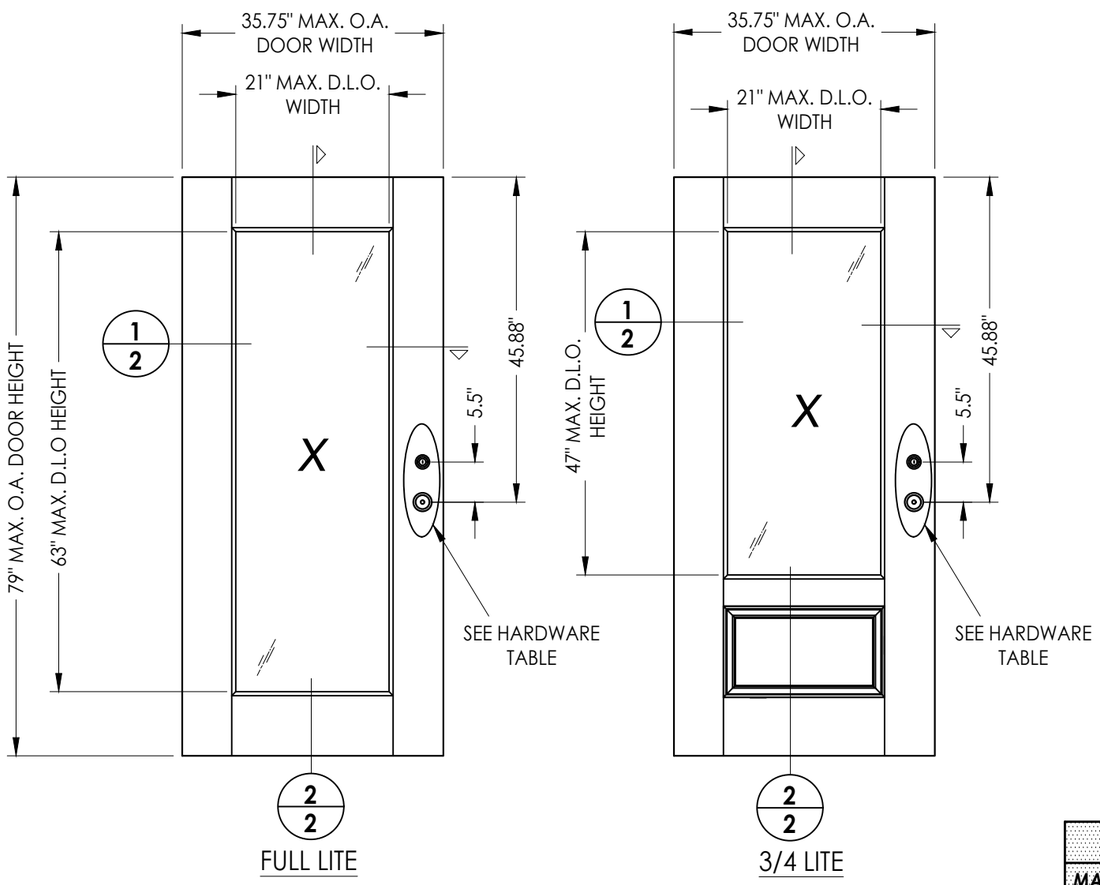

40 **FIBERGLASS DOOR PANELS**
TRINITY GLASS

FIBERGLASS DOOR SKIN: MIN. 0.080" THK.
FOAM CORE MATERIAL: POLYURETHANE

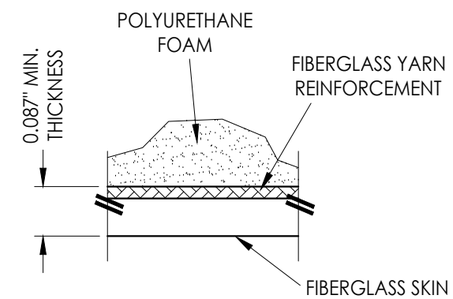

FIBERGLASS SKIN DETAIL

HARDWARE CHART		
MANUFACTURER	MODEL	
KWIKSET	KNOB:	SIGNATURE SERIES
	DEADBOLT:	SIGNATURE SERIES (980)

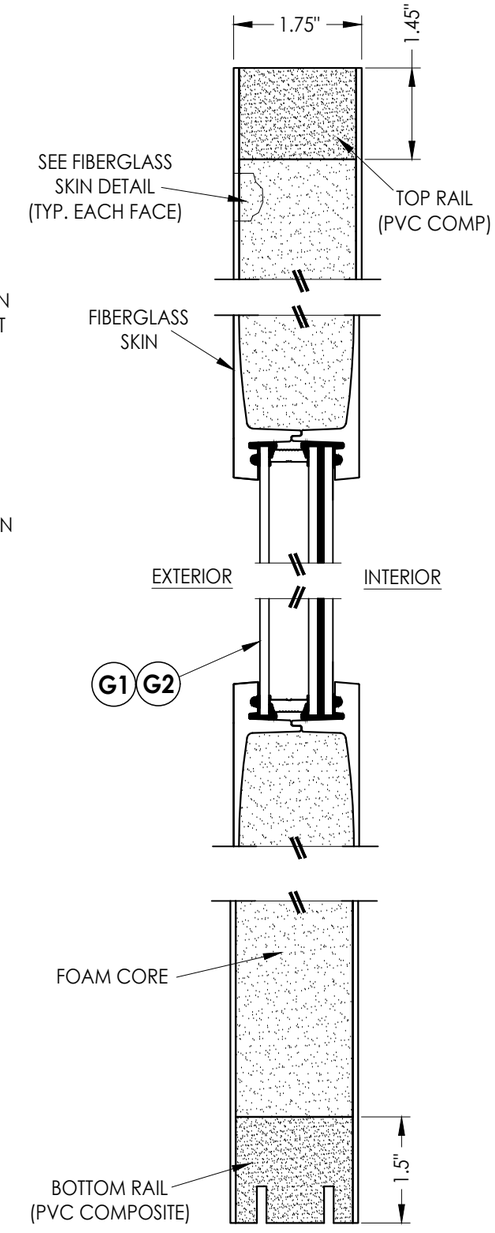

2/2 **VERTICAL CROSS SECTION**

Documents Prepared By:
Lyndon F. Schmidt
P.E. No. 43409
RW BUILDING CONSULTANTS, INC.
P.O. Box 230, Valrico, FL 33595
Phone No.: 813.659.9197
FBPE Registry No. 9813

PRODUCT: TRINITY FIBERGLASS DOOR
PART OR ASSEMBLY: DOOR PANEL DETAILS

NO.	DATE	REVISIONS	BY

DATE: 5/15/25
SCALE: N.T.S.
DWG. BY: RW
CHK. BY: LFS
DRAWING NO.: FL-47284.9
SHEET 2 OF 9

© 2025 R.W. Building Consultants Inc.

Z:\2023 FBC Drawings\Trinity Glass Int'l\FL-47284 R1\FL-47284.9.dwg

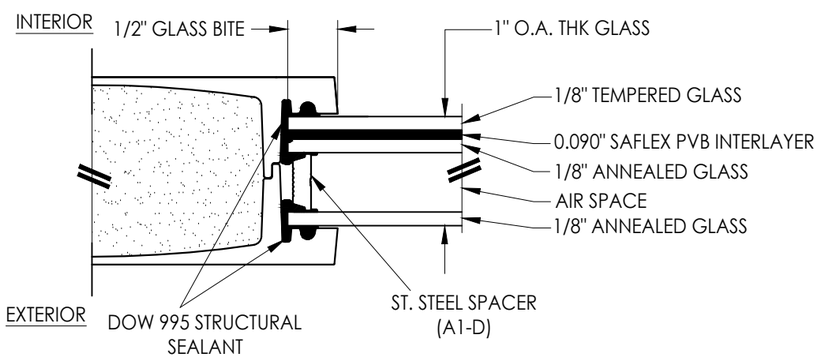

G1 GLAZING DETAIL
CLEAR GLASS

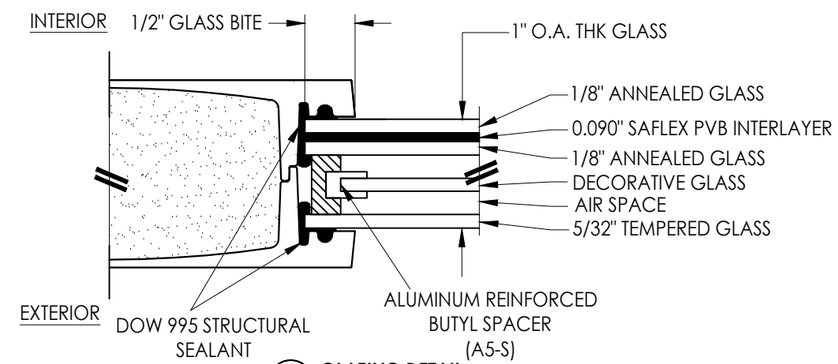

G2 GLAZING DETAIL
DECORATIVE GLASS

Documents Prepared By:
Lyndon F. Schmidt
P.E. No. 43409

RW BUILDING CONSULTANTS, INC.
P.O. Box 230, Valrico, FL 33595
Phone No.: 813.659.9197
FBPE Registry No. 9813

PRODUCT: *TRINITY FIBERGLASS DOOR*

PART OR ASSEMBLY: *FLUSH GLAZING DETAILS*

NO.	DATE	REVISIONS	BY

DATE: 5/15/25
SCALE: N.T.S.
DWG. BY: RW
CHK. BY: LFS
DRAWING NO.: FL-47284.9
SHEET 3 OF 9

© 2025 R.W. Building Consultants Inc.

Z:\2023 FBC Drawings\Trinity Glass Int'l\FL-47284 R1\FL-47284.9.dwg

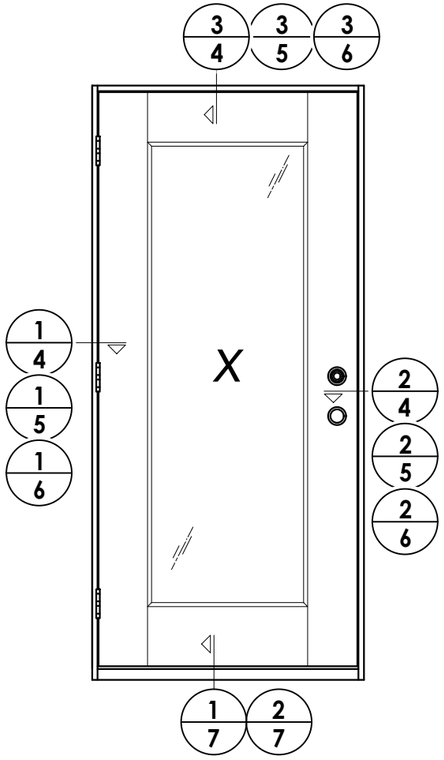

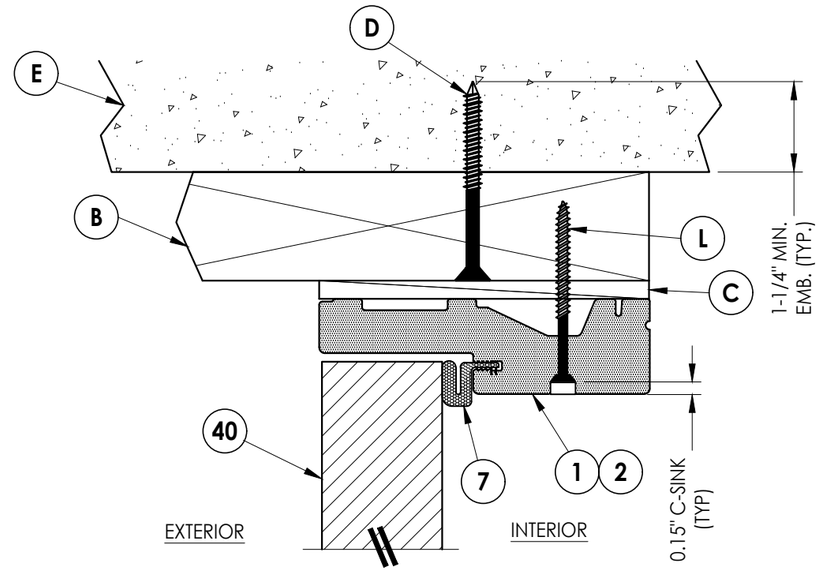

3/4 VERTICAL CROSS SECTION
Outswing Shown (Inswing Similar)
Shown w/ 2X Buck

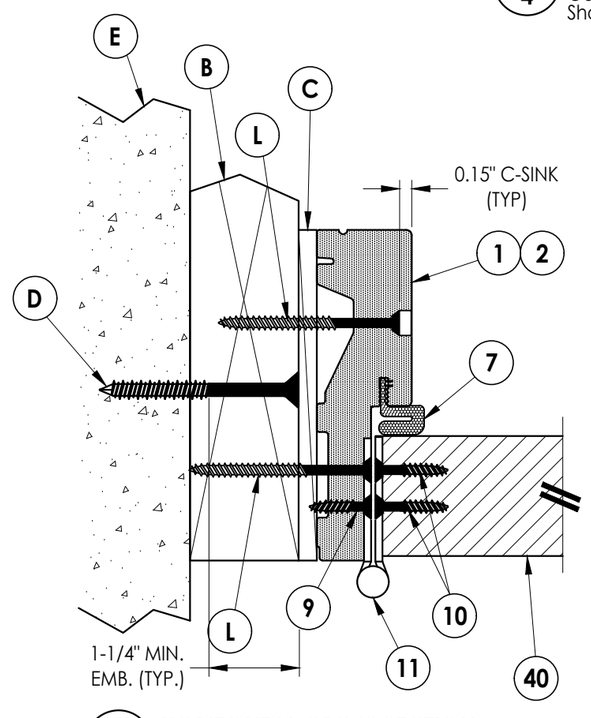

1/4 HORIZONTAL CROSS SECTION
Outswing Shown (Inswing Similar)
Shown w/ 2X Buck

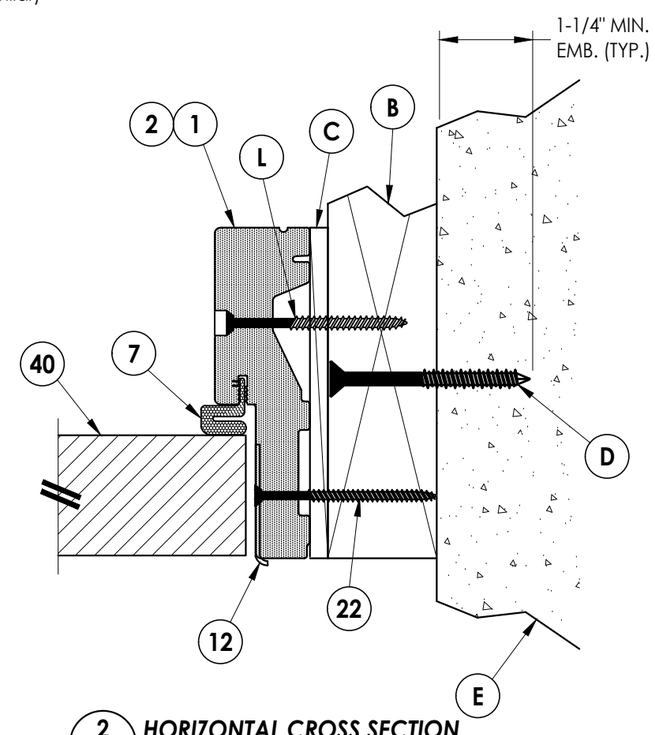

2/4 HORIZONTAL CROSS SECTION
Outswing Shown (Inswing Similar)
Shown w/ 2X Buck

Documents Prepared By:
Lyndon F. Schmidt
P.E. No. 43409

RW BUILDING CONSULTANTS, INC.
P.O. Box 230, Valrico, FL 33595
Phone No.: 813.659.9197
FBPE Registry No. 9813

PRODUCT: TRINITY FIBERGLASS DOOR

PART OR ASSEMBLY: HORIZONTAL & VERTICAL CROSS SECTIONS (2X BUCK)

NO.	DATE	REVISIONS	BY

DATE: 5/15/25
SCALE: N.T.S.
DWG. BY: RW
CHK. BY: LFS
DRAWING NO.: FL-47284.9
SHEET 4 OF 9

© 2025 R.W. Building Consultants Inc.

Z:\2023 FBC Drawings\Trinity Glass Int'l\FL-47284 R1\FL-47284.9.dwg

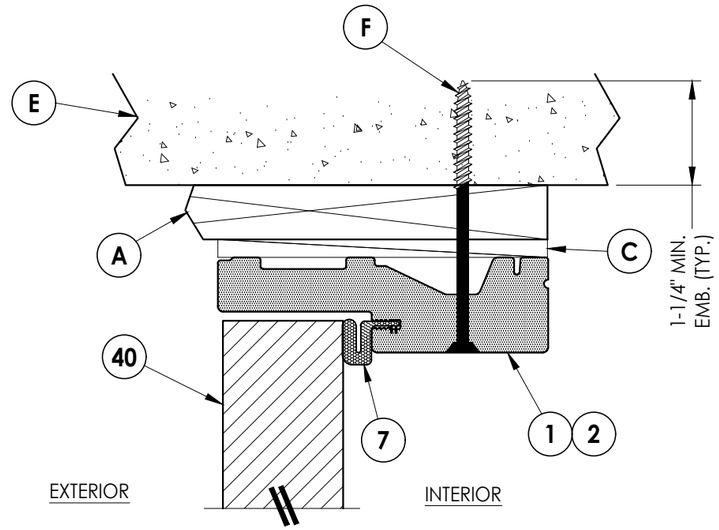

3/5 VERTICAL CROSS SECTION
Outswing Shown (Inswing Similar)
Shown w/ 1X Buck

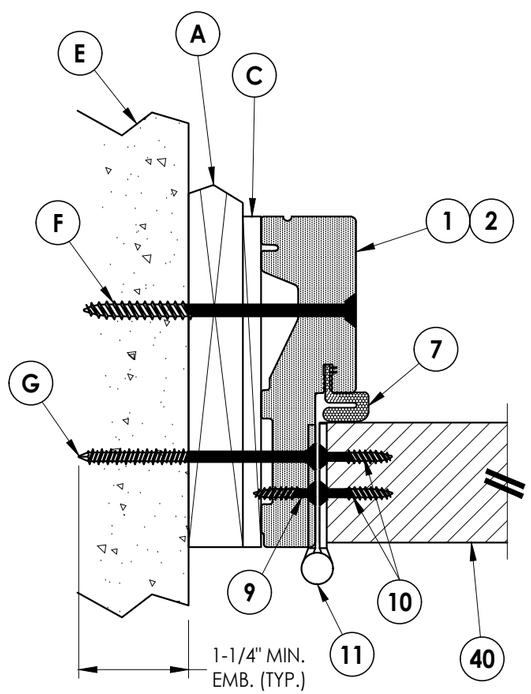

1/5 HORIZONTAL CROSS SECTION
Outswing Shown (Inswing Similar)
Shown w/ 1X Buck

INTERIOR

EXTERIOR

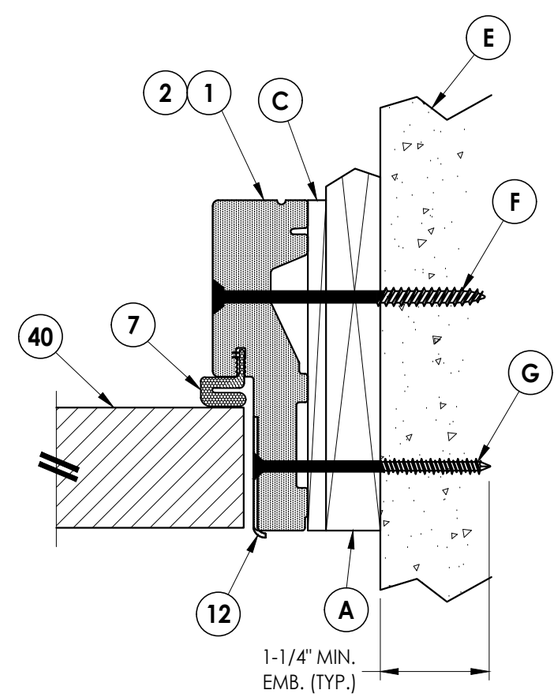

2/5 HORIZONTAL CROSS SECTION
Outswing Shown (Inswing Similar)
Shown w/ 1X Buck

Documents Prepared By:
Lyndon F. Schmidt
P.E. No. 43409
RW BUILDING CONSULTANTS, INC.
P.O. Box 230, Valrico, FL 33595
Phone No.: 813.659.9197
FBPE Registry No. 9813

PRODUCT: TRINITY FIBERGLASS DOOR

PART OR ASSEMBLY: HORIZONTAL & VERTICAL CROSS SECTIONS (1X BUCK)

NO.	DATE	BY

REVISIONS

DATE: 5/15/25
SCALE: N.T.S.
DWG. BY: RW
CHK. BY: LFS
DRAWING NO.: FL-47284.9
SHEET 5 OF 9

© 2025 R.W. BUILDING CONSULTANTS INC.

Z:\2023 FBC Drawings\Trinity Glass Int'l\FL-47284 R1\FL-47284.9.dwg

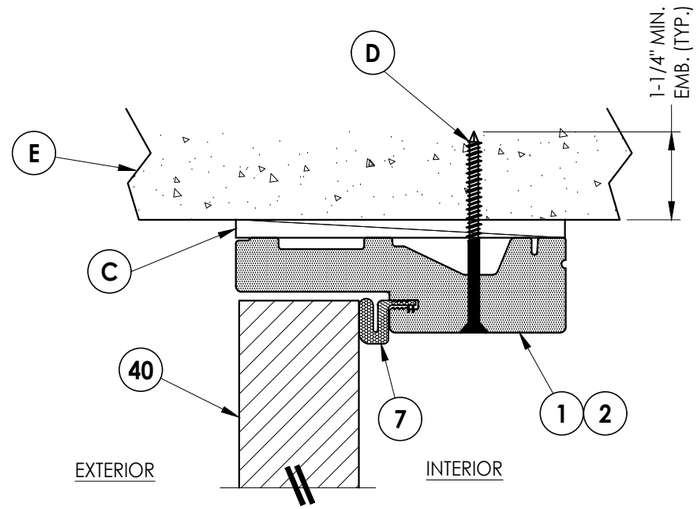

3/6 **VERTICAL CROSS SECTION**
Outswing Shown (Inswing Similar)
Shown Direct to Masonry

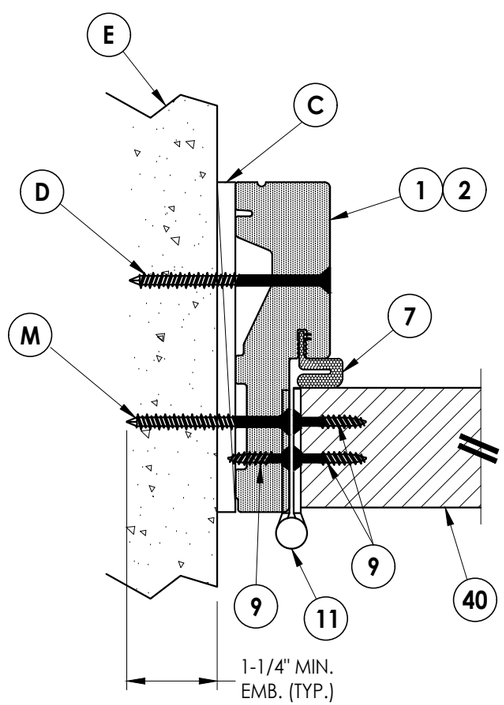

1/6 **HORIZONTAL CROSS SECTION**
Outswing Shown (Inswing Similar)
Shown Direct to Masonry

INTERIOR

EXTERIOR

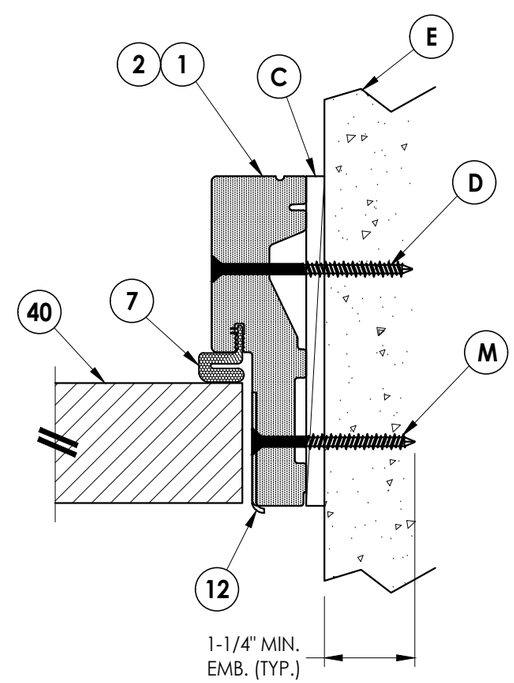

2/6 **HORIZONTAL CROSS SECTION**
Outswing Shown (Inswing Similar)
Shown Direct to Masonry

Documents Prepared By:
Lyndon F. Schmidt
P.E. No. 43409

RW BUILDING CONSULTANTS, INC.
P.O. Box 230, Valrico, FL 33595
Phone No.: 813.659.9197
FBPE Registry No. 9813

PRODUCT: TRINITY FIBERGLASS DOOR

PART OR ASSEMBLY: HORIZONTAL & VERTICAL CROSS SECTIONS (DIRECT TO MASONRY)

NO.	DATE	REVISIONS	BY

DATE: 5/15/25
SCALE: N.T.S.
DWG. BY: RW
CHK. BY: LFS
DRAWING NO.: FL-47284.9
SHEET 6 OF 9

© 2025 R.W. Building Consultants Inc.

Z:\2023 FBC Drawings\Trinity Glass Int'l\FL-47284 R1\FL-47284.9.dwg

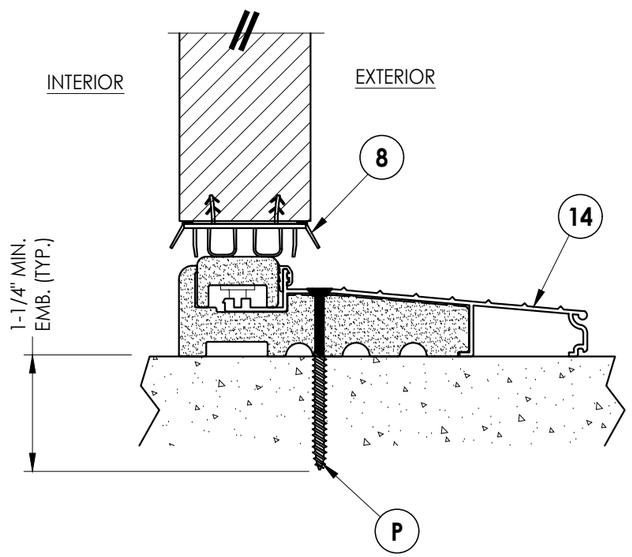

1/7 **VERTICAL CROSS SECTION**
Inswing Sill

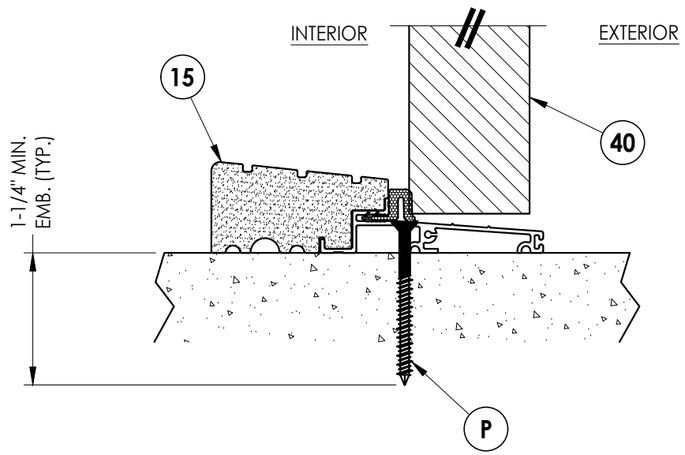

2/7 **VERTICAL CROSS SECTION**
Outswing Sill

Documents Prepared By:
Lyndon F. Schmidt
P.E. No. 43409

RW BUILDING CONSULTANTS, INC.
P.O. Box 230, Valrico, FL 33595
Phone No.: 813.659.9197
FBPE Registry No. 9813

PRODUCT: *TRINITY FIBERGLASS DOOR*

PART OR ASSEMBLY: *VERTICAL CROSS SECTIONS (THRESHOLDS)*

NO.	DATE	REVISIONS	BY

DATE: 5/15/25
SCALE: N.T.S.
DWG. BY: RW
CHK. BY: LFS
DRAWING NO.: FL-47284.9
SHEET 7 OF 9

© 2025 R.W. Building Consultants Inc.

Z:\2023 FBC Drawings\Trinity Glass Int'l\FL-47284 R1\FL-47284.9.dwg

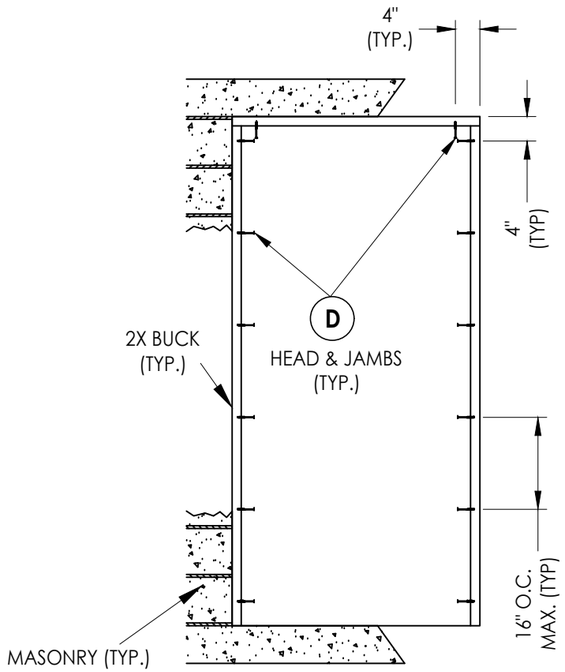

X

2X BUCK ANCHORING

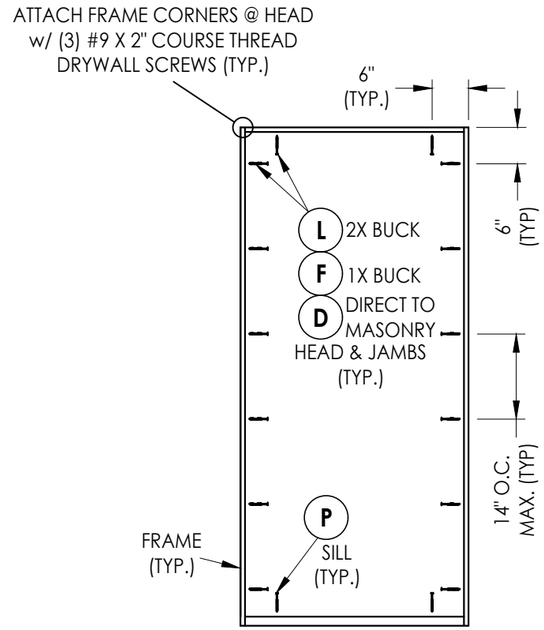

X

FRAME ANCHORING

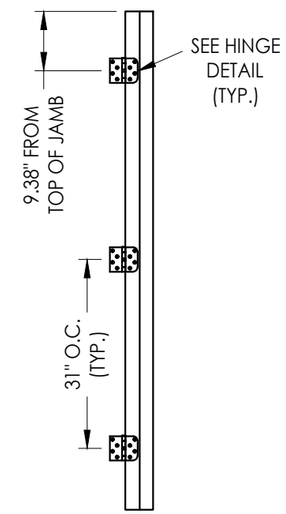

HINGE JAMB

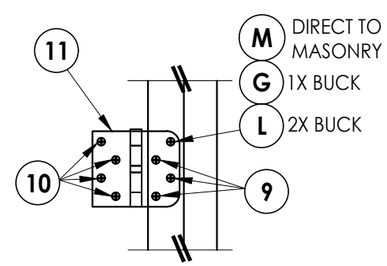

HINGE DETAIL
INSWING

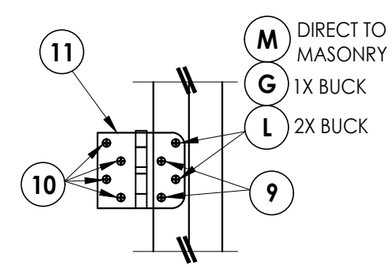

HINGE DETAIL
OUTSWING

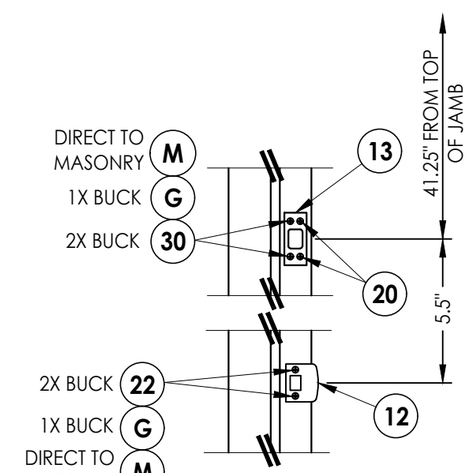

STRIKE PLATE DETAIL
KWIKSET LOCKSET

HARDWARE DETAILS

Documents Prepared By:
Lyndon F. Schmidt
P.E. No. 43409

RW BUILDING CONSULTANTS, INC.
P.O. Box 230, Valrico, FL 33595
Phone No.: 813.659.9197
FBPE Registry No. 9813

PRODUCT: *TRINITY FIBERGLASS DOOR*

PART OR ASSEMBLY: *FRAME ANCHORING & HARDWARE DETAILS*

NO.	DATE	REVISIONS	BY

DATE: 5/15/25
SCALE: N.T.S.
DWG. BY: RW
CHK. BY: LFS
DRAWING NO.: FL-47284.9
SHEET 8 OF 9

© 2025 R.W. Building Consultants Inc.

Z:\2023 FBC Drawings\Trinity Glass Int'l\FL-47284 R1\FL-47284.9.dwg

BILL OF MATERIALS

ITEM #	DESCRIPTION	MATERIAL
A	1X BUCK (G >= 0.42)	WOOD
B	2X BUCK (G >= 0.42)	WOOD
C	1/4" MAX. SHIM SPACE	-
D	1/4" X 2-3/4" PFH DeWALT OR ITW CONCRETE SCREW	STEEL
E	MASONRY - 3,000 PSI MIN. CONCRETE CONFORMING TO ACI 301 OR HOLLOW BLOCK CONFORMING TO ASTM C90	CONCRETE
F	1/4" X 3-3/4" PFH DeWALT OR ITW CONCRETE SCREW	STEEL
G	3/16" X 3-1/4" PFH ITW CONCRETE SCREW	STEEL
L	#10 X 2-1/2" PFH WOOD SCREW (1.15" MIN. EMB.)	STEEL
M	3/16" X 2-1/4" PFH ITW CONCRETE SCREW	STEEL
P	1/4" X 2-1/4" PFH DeWALT OR ITW CONCRETE SCREW	STEEL
1	PVC JAMB	PVC
2	WOOD JAMB	WOOD
7	WEATHERSTRIP	FOAM
8	DOOR SWEEP	VINYL
9	#9 X 3/4" PFH WOOD SCREW	STEEL
10	#9 X 1" PFH WOOD SCREW	STEEL
11	4" X 4" HINGE	STEEL
12	LATCH STRIKE PLATE	STEEL
13	DEADBOLT STRIKE PLATE	STEEL
14	INSWING THRESHOLD	ALUM/COMP
15	OUTSWING THRESHOLD	ALUM/COMP
20	#8 X 1/2" PFH WOOD SCREW	STEEL
22	#8 X 2-1/2" PFH WOOD SCREW	STEEL
30	#12 X 2-1/2" PFH WOOD SCREW	STEEL
40	DOOR PANEL	-

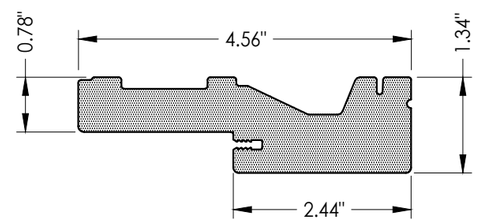

1 **PVC JAMB**

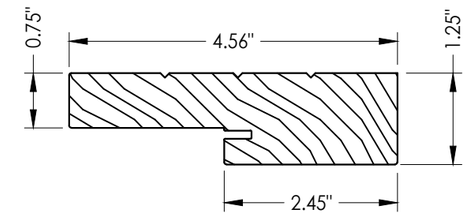

2 **WOOD JAMB**
FINGER JOINTED PINE

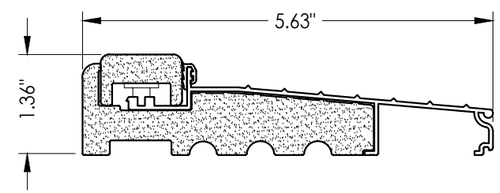

14 **INSWING THRESHOLD**

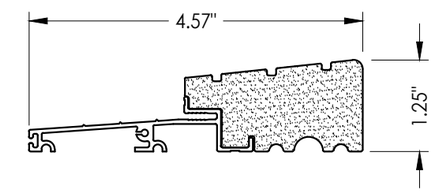

15 **OUTSWING THRESHOLD**

CONCRETE ANCHOR NOTES:

1. *Concrete anchor locations at the corners may be adjusted to maintain the min. edge distance to mortar joints.*
2. *Concrete anchor locations noted as "MAX. ON CENTER" must be adjusted to maintain the min. edge distance to mortar joints, additional concrete anchors may be required to ensure the "MAX. ON CENTER" dimension are not exceeded.*
3. *Concrete anchor table:*

ANCHOR TYPE	ANCHOR SIZE	MIN. EMBEDMENT	MIN. CLEARANCE TO MASONRY EDGE	MIN. CLEARANCE TO ADJACENT ANCHOR
ITW BUILDEX TAPCON®	3/16"	1-1/4"	3"	1-1/2"
	1/4"	1-1/4"	2"	4"
DeWALT ULTRACON+®	1/4"	1-1/4"	1"	4"

WOOD SCREW INSTALLATION NOTES:

1. *Maintain a minimum 5/8" edge distance, 1" end distance, & 1" o.c. spacing of wood screws to prevent the splitting of wood.*

Documents Prepared By:
Lyndon F. Schmidt
P.E. No. 43409

RW BUILDING CONSULTANTS, INC.
P.O. Box 230, Valrico, FL 33595
Phone No.: 813.659.9197
FBPE Registry No. 9813

PRODUCT: *TRINITY FIBERGLASS DOOR*

PART OR ASSEMBLY: *BILL OF MATERIALS & COMPONENTS*

NO.	DATE	REVISIONS	BY

DATE: 5/15/25
SCALE: N.T.S.
DWG. BY: RW
CHK. BY: LFS
DRAWING NO.: FL-47284.9
SHEET 9 OF 9

© 2025 R.W. Building Consultants Inc.

Z:\2023 FBC Drawings\Trinity Glass Int'l\FL-47284 R1\FL-47284.9.dwg